Air cavity plastic earless flanged package; 8 leads **SOT1252-1**

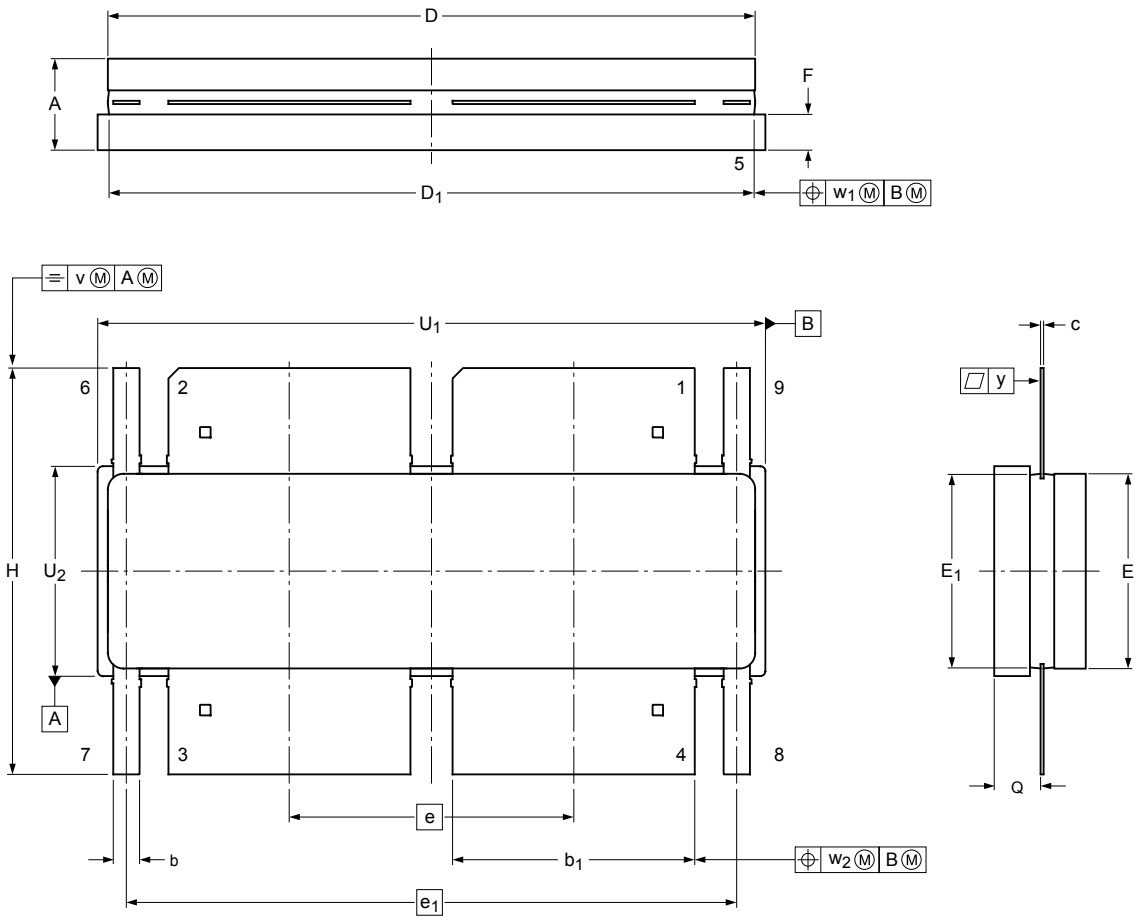

0 5 10 mm
scale

y
0.10

Dimensions

Unit		A	b	b_1	c	D	D_1	E	E_1	e	e_1	F	H	Q(1)	U_1	U_2	v	w_1	w_2
mm	max	4.65	1.37	11.78	0.20	31.44	31.34	9.60	9.50			1.83	19.71	2.33	32.33	10.23	0.50	0.50	0.50
	nom									13.72	29.46								
	min	4.18	1.17	11.58	0.10	31.04	31.14	9.20	9.30			1.63	19.51	2.13	32.13	10.03			

Note
1. Dimension Q is measured 0.1 mm away from the flange.
2. Ringframe and/or ringframe glue shall not overhang at the side of the flange.

sot1252-1_po

Outline version	References				European projection	Issue date
	IEC	JEDEC	JEITA			
SOT1252-1						~~15-06-09~~ 16-10-04

© 2016 Ampleon Netherlands B.V.
All rights reserved. Reproduction in whole or in part is prohibited without prior consent of the copyright owner. The information presented in this document does not form part of any quotation or contract, is believed to be accurate and reliable and may be changed without notice. No liability will be accepted by the publisher for any consequence of it's use. Publication thereof does not convey or imply any license under patent- or other industrial or intellectual property rights.

Printed in the Netherlands