HSOP4F: plastic, heatsink small outline package; 4 leads(flat) **SOT1223-2**

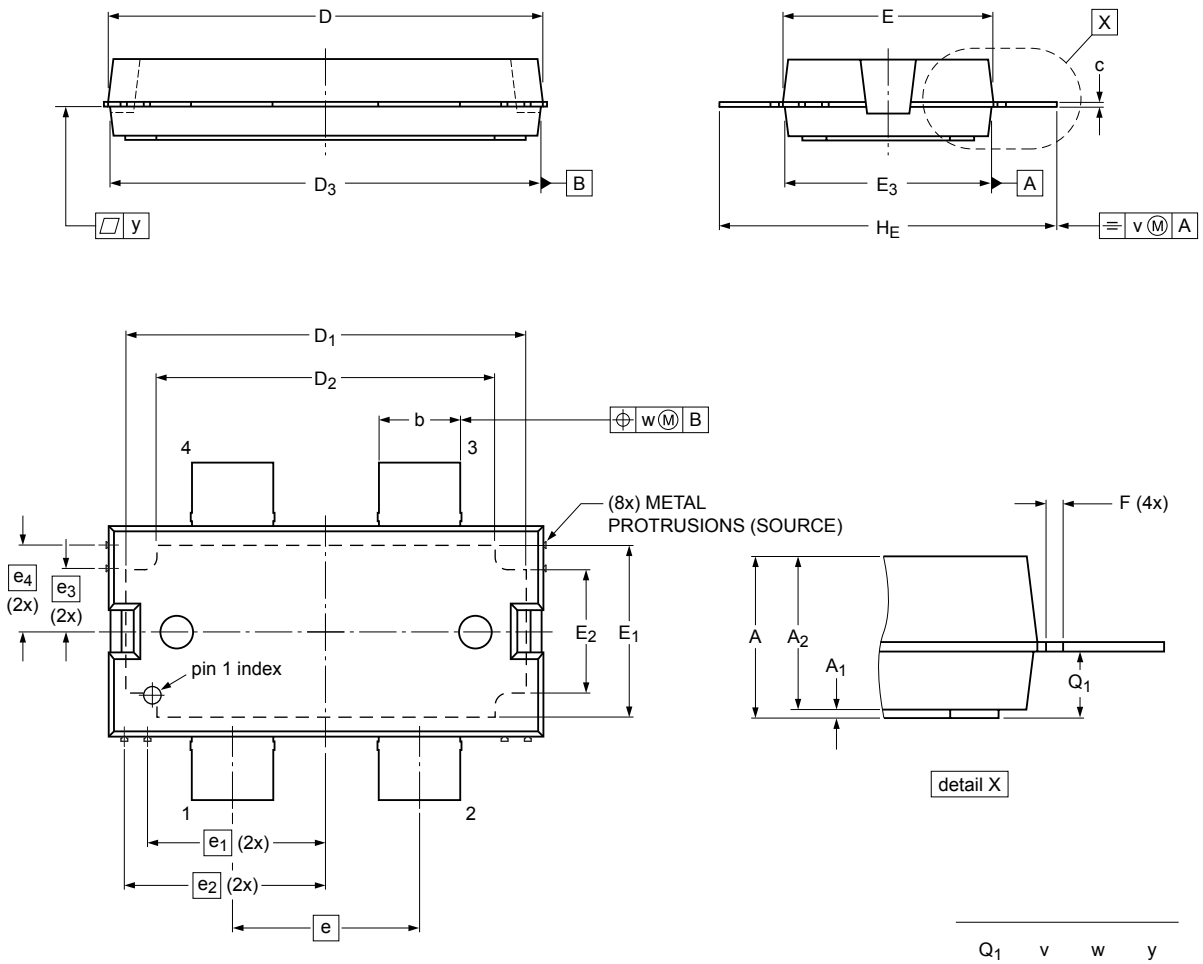

Q_1	v	w	y
1.62			0.1
1.57	0.25	0.25	
1.52			

0 10 mm
scale

Dimensions (mm are the original dimensions)

Unit		A	A_1	A_2	b	c	$D^{(1)}$	D_1	D_2	D_3	$E^{(1)}$	E_1	E_2	E_3	e	e_1	e_2	e_3	e_4	F	H_E
	max	3.9	0.2	3.65	3.90	0.27	20.62	19.00	16.05	20.44	10.01	8.18	5.89	9.83							16.16
mm	nom		0.1	3.60	3.85	0.22	20.57	18.95	16.00	20.39	9.96	8.13	5.84	9.78	8.85	8.45	9.55	2.97	4.07	0.4	15.96
	min		0	3.55	3.80	0.17	20.52	18.90	15.95	20.34	9.91	8.08	5.79	9.73							15.76

Note
1. Package body dimensions “D” and “E” do not include mold and metal protrusions. Allowable protrusion is 0.25 mm per side.
2. Lead width dimension “b” does not include dambar protrusions. Allowable dambar protrusion is 0.25 mm in total per lead.

sot1223-2_po

Outline version	References				European projection	Issue date
	IEC	JEDEC	JEITA			
SOT1223-2						~~15-01-12~~ 15-06-04

© 2015 Ampleon B.V.
All rights reserved. Reproduction in whole or in part is prohibited without prior consent of the copyright owner. The information presented in this document does not form part of any quotation or contract, is believed to be accurate and reliable and may be changed without notice. No liability will be accepted by the publisher for any consequence of it’s use. Publication thereof does not convey or imply any license under patent- or other industrial or intellectual property rights.

Printed in the Netherlands