Package outline

OMP-1230-4G-1

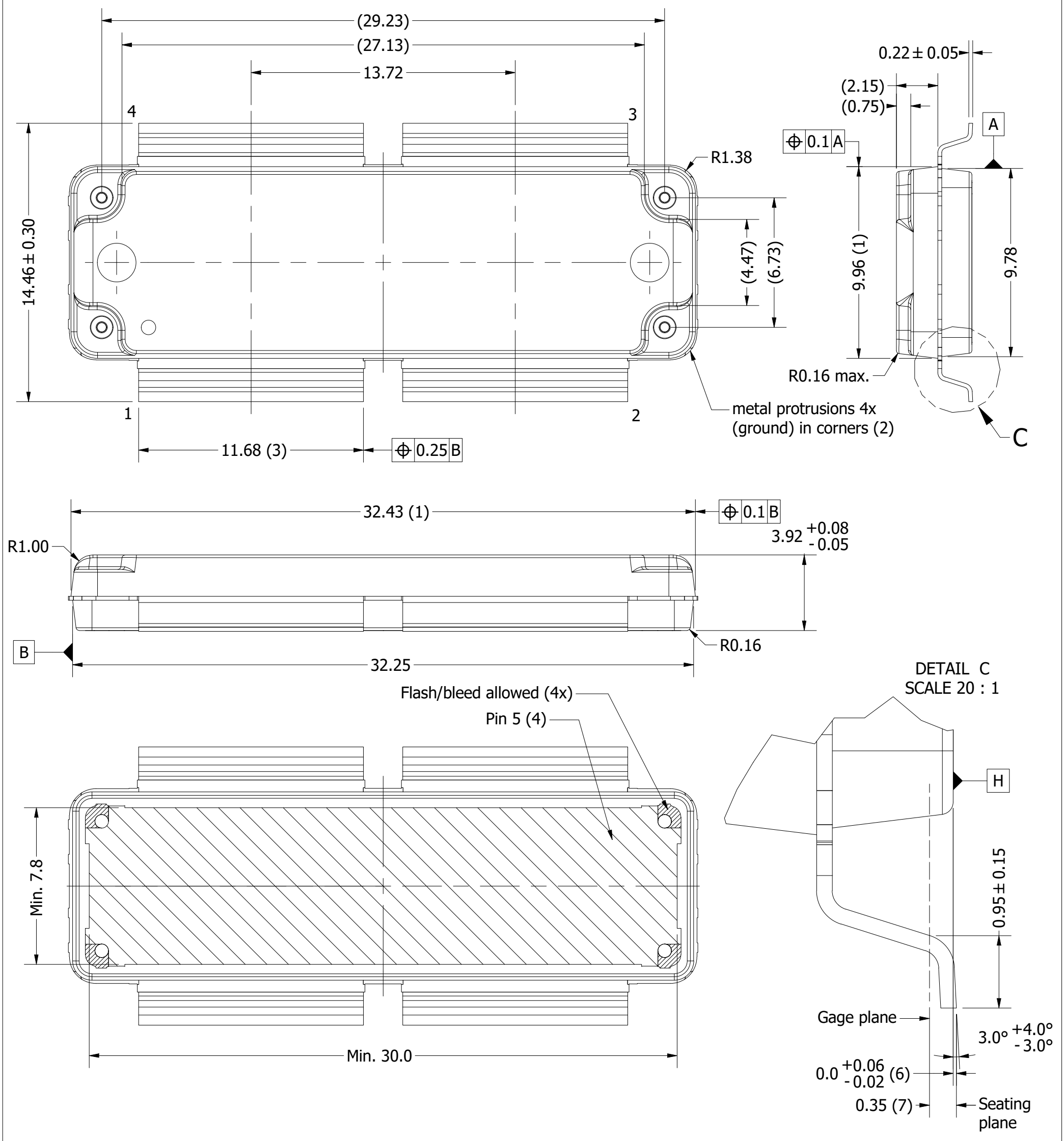

Package outline drawing: OMP-1230-4G-1	units in mm.	Tolerances unless otherwise stated: Dimension: ± 0.05 Angle: ± 1° Third angle projection	Revision: 0 Revision date: 7/2/2019 Sheet 1 of 2

Drawing Notes	
Items	Description
(1)	Dimensions are excluding mold protrusion. Areas located adjacent to the leads have a maximum mold protrusion of 0.25 mm (per side) and 0.62 mm max. in length. At all other areas the mold protrusion is maximum 0.15 mm per side. See also detail B.
(2)	The metal protrusion (tie bars) in the corner will not stick out of the molding compound protrusions (detail A).
(3)	The lead dambar (metal) protrusions are not included. Add 0.14 mm max to the total lead dimension at the dambar location.
(4)	The hatched area indicates the exposed metal heatsink.
(5)	The leads and exposed heatsink are plated with matte Tin (Sn).
(6)	Dimension is measured with respect to the bottom of the plastic package Datum H. Positive value means that the bottom of the package is higher than the bottom of the lead.
(7)	Gage plane (foot length) to be measured from the seating plane.

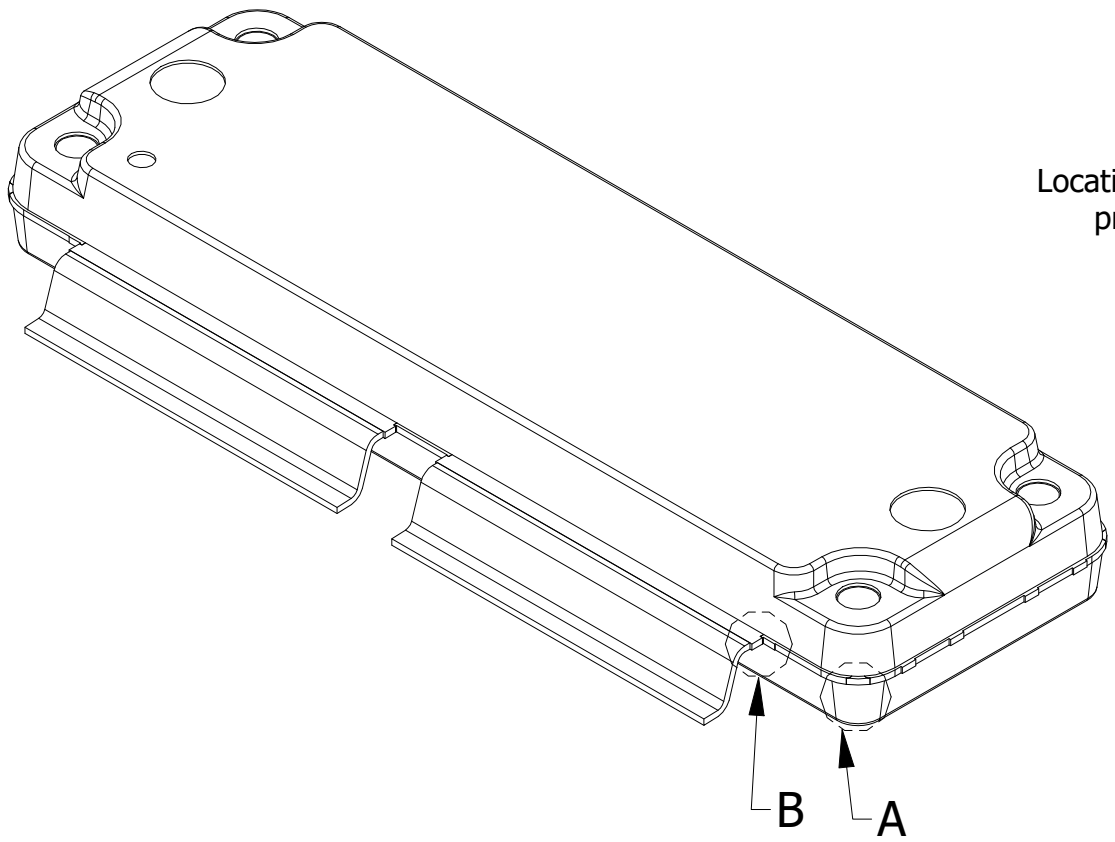

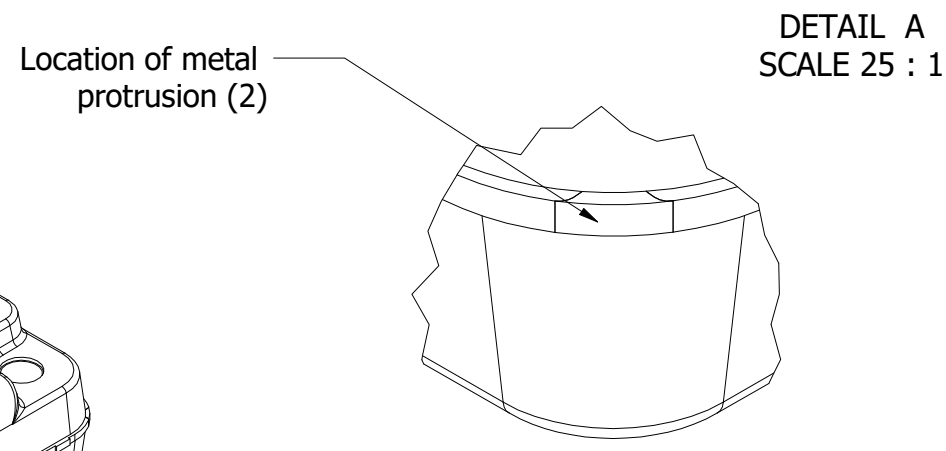

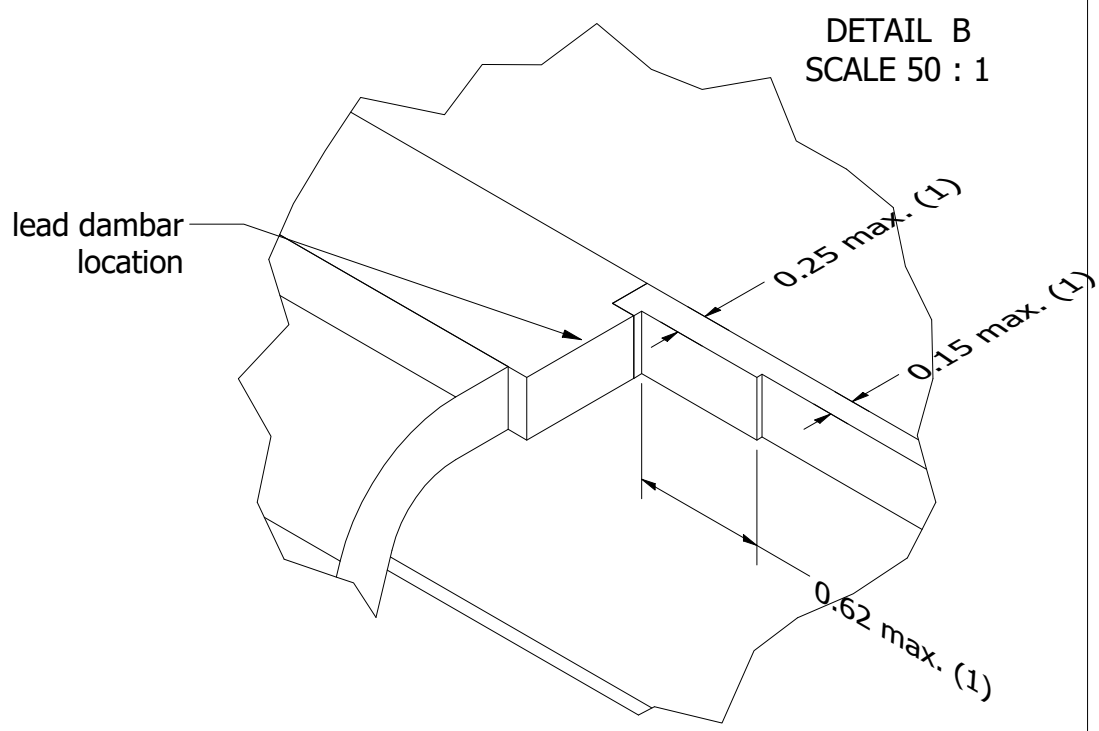

Package outline drawing:	units in mm.	Tolerances unless otherwise stated: Dimension: ± 0.05 Angle: ± 1°	Revision: 0 Revision date: 7/2/2019
OMP-1230-4G-1		Third angle projection	Sheet 2 of 2